THIS DRAWING IS UNPUBLISHED. RELEASED FOR PUBLICATION -,- .
© COPYRIGHT - BY TYCO ELECTRONICS CORPORATION. ALL RIGHTS RESERVED.

LOC	DIST
AA	00

REVISIONS

P	LTR	DESCRIPTION	DATE	DWN	APVD
	K2	REV PER ECR-08-014279	16JUNE08	DZ	SY

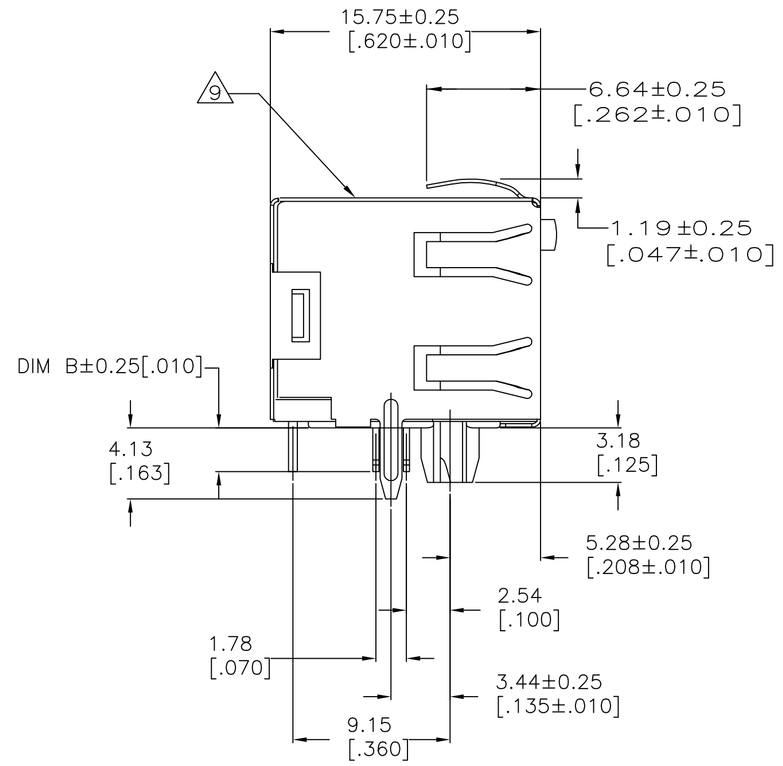

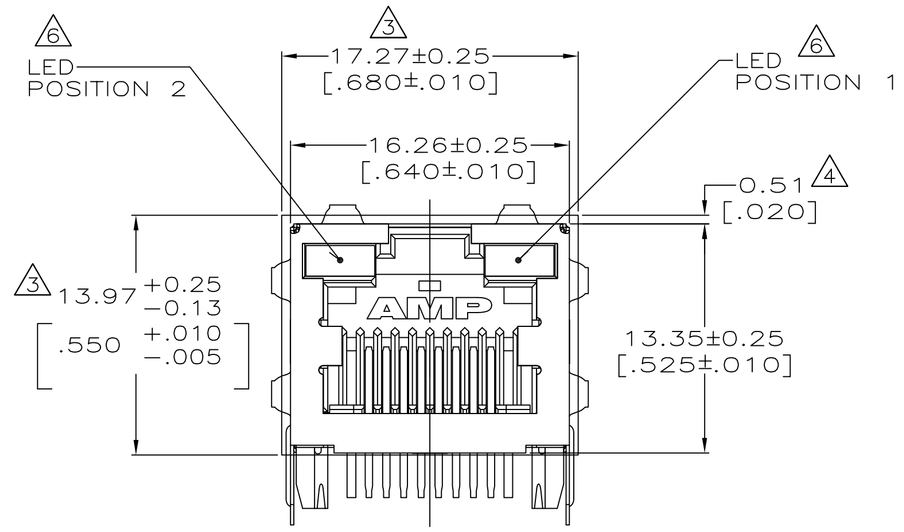

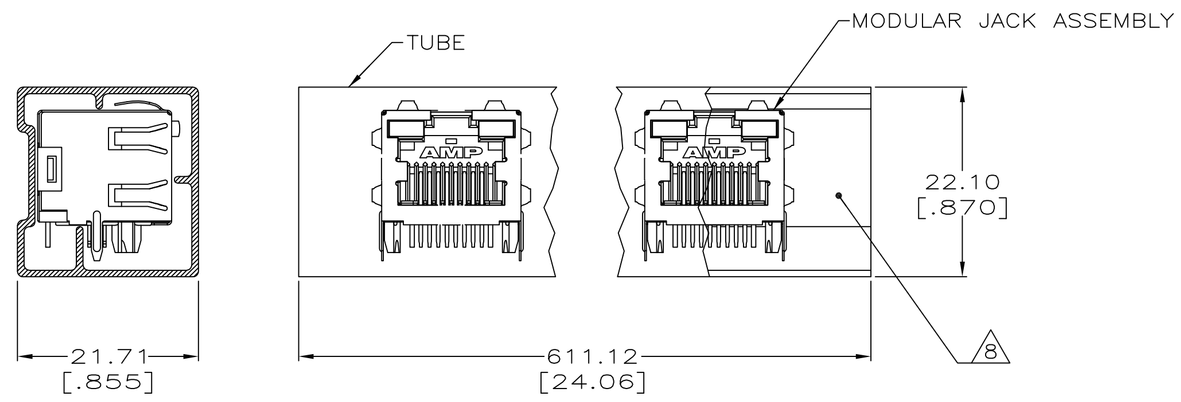

DETAIL A
TUBE PACKAGING
SCALE 2:1

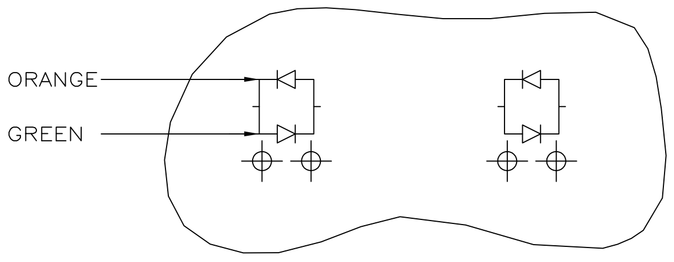

LED CURRENT DIAGRAM
406507-7, 1-406507-7,
AND 3-406507-7

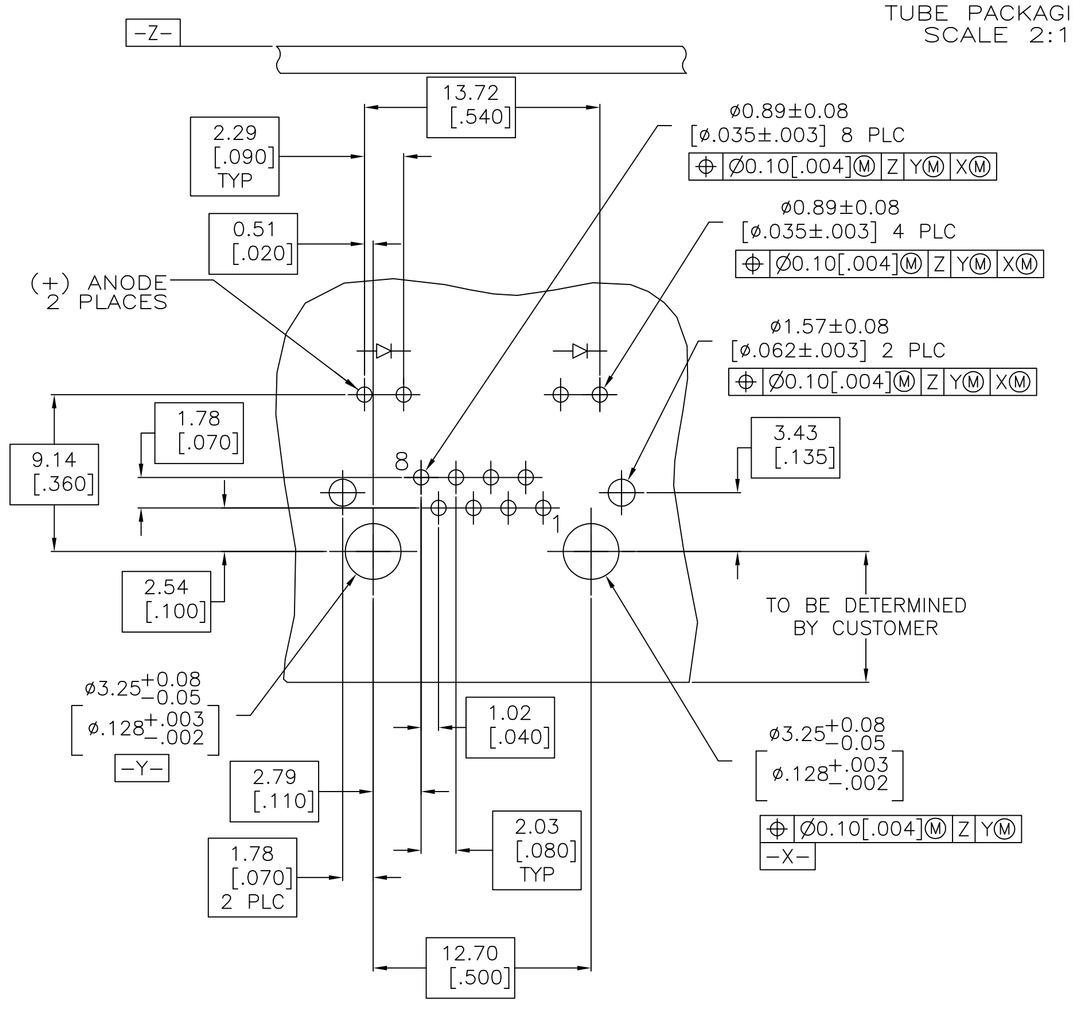

RECOMMENDED PRINTED CIRCUIT BOARD
(COMPONENT SIDE)

1. MATERIAL:
HOUSING – HIGH TEMPERATURE THERMOPLASTIC, BLACK, UL94V-0.
TERMINALS – 0.36[.014] THICK PHOS BRONZE PLATED WITH 3.81µm[.000150] MINIMUM THICK (SEE P/N TABLE) IN SOLDER AREA. 1.27µm [.000050] MINIMUM GOLD IN LOCALIZED PLATE AREA. ENTIRE TERMINAL PLATED WITH 1.27µm [.000050] MINIMUM THICK NICKEL.
SHIELD – 0.196[.0077] THICK COPPER ZINC ALLOY PREPLATED WITH 1.27µm[.000050] MINIMUM SATIN NICKEL WITH 2.03µm[.000080] MINIMUM TIN POST DIPPED ON PCB GROUND TABS.
LIGHT EMITTING DIODE (LED) – DIFFUSED EPOXY LENS, 0.51 x 0.51[.020 x .020] CARBON STEEL WIREFRAME LEADS PLATED WITH 8.89µm[.000350] TIN/COPPER OVER 2.03µm[.000080]
SILVER OVER 1.02µm[.000040] NICKEL UNDERPLATE OVER 2.03µm[.000080] COPPER UNDERPLATE.

2. JACK CAVITY CONFORMS TO FCC RULES AND REGULATIIONS PART 68, SUBPART F.

3. SUGGESTED PANEL OPENING DIMENSIONS.

4. SUGGESTED CLEARANCE BETWEEN TOP OF CONNECTOR AND TOP PANEL OPENING.

5. 0.051[.002] WHITE POLYESTER INSULATOR APPLIED TO BACK OF HOUSING.

6. SEE TABLE FOR COLOR OF LEDS AND NUMBER REQUIRED.

7. THIS MODULAR JACK WITH INTEGRATED LED IS NOT IR REFLOW SOLDERING PROCESS COMPATIBLE.

8. PACKAGED 30 PIECES PER TUBE. SEE DETAIL "A".

9. MANUFACTURING DATE CODE:
LOCATED APPROX. AS SHOWN.
FIRST 2 DIGITS = LAST 2 DIGITS OF YEAR.
NEXT 2 DIGITS = MANUFACTURING WORK WEEK.
LAST DIGIT = DAY OF WEEK WITH SUNDAY = 1.

	TERMINAL LEAD PLATING (1)	DIM B SOLDERTAIL LENGTH	PACKAGING	INDICATOR COLOR POSITION 2	INDICATOR COLOR POSITION 1	PART NUMBER
	TIN-LEAD	2.54 [.100]	(8) TUBE	GREEN	YELLOW	7-406507-4
	MATTE TIN	3.05 [.120]	TRAY	ORANGE/GREEN	ORANGE/GREEN	3-406507-7
	MATTE TIN	3.05 [.120]	TRAY	GREEN	GREEN	3-406507-5
	MATTE TIN	3.05 [.120]	TRAY	GREEN	YELLOW	3-406507-4
	MATTE TIN	3.05 [.120]	TRAY	YELLOW	GREEN	3-406507-1
	MATTE TIN	2.54 [.100]	(8) TUBE	GREEN	YELLOW	2-406507-4
	MATTE TIN	2.54 [.100]	TRAY	ORANGE/GREEN	ORANGE/GREEN	1-406507-7
	MATTE TIN	2.54 [.100]	TRAY	YELLOW	YELLOW	1-406507-6
	MATTE TIN	2.54 [.100]	TRAY	GREEN	GREEN	1-406507-5
	MATTE TIN	2.54 [.100]	TRAY	GREEN	YELLOW	1-406507-4
	MATTE TIN	2.54 [.100]	TRAY	YELLOW	–	1-406507-3
	MATTE TIN	2.54 [.100]	TRAY	–	GREEN	1-406507-2
	MATTE TIN	2.54 [.100]	TRAY	YELLOW	GREEN	1-406507-1
	TIN-LEAD	2.54 [.100]	TRAY	ORANGE/GREEN	ORANGE/GREEN	406507-7
	TIN-LEAD	2.54 [.100]	TRAY	YELLOW	YELLOW	406507-6
OBSOLETE	~~TIN-LEAD~~	~~2.54 [.100]~~	~~TRAY~~	~~GREEN~~	~~GREEN~~	~~406507-5~~
	TIN-LEAD	2.54 [.100]	TRAY	GREEN	YELLOW	406507-4
	TIN-LEAD	2.54 [.100]	TRAY	YELLOW	–	406507-3
	TIN-LEAD	2.54 [.100]	TRAY	–	GREEN	406507-2
	TIN-LEAD	2.54 [.100]	TRAY	YELLOW	GREEN	406507-1

THIS DRAWING IS A CONTROLLED DOCUMENT.

DIMENSIONS: mm [INCHES]

TOLERANCES UNLESS OTHERWISE SPECIFIED:
0 PLC ± –
1 PLC ± –
2 PLC ± 0.25[.01]
3 PLC ± 0.13[.005]
4 PLC ± –
ANGLES ± –

MATERIAL (1)
FINISH (1)

DWN T. SPRINKLE 15SEP97
CHK T. SPRINKLE 15SEP97
APVD M. DERSTINE 09OCT97
PRODUCT SPEC 108-1163-4
APPLICATION SPEC 114-2154
WEIGHT –

Tyco Electronics
Tyco Electronics Corporation
Harrisburg, PA 17105-3608

NAME
INVERTED MODULAR JACK ASSEMBLY,
1X1, SHIELDED, PANEL GROUND,
LED, INSULATOR

SIZE	CAGE CODE	DRAWING NO	RESTRICTED TO
A1	00779	C-406507	–

CUSTOMER DRAWING | SCALE 4:1 | SHEET 1 OF 1 | REV K2